LTS
Video Solutions for Security Professionals™

Platinum 2MP Network Dome Camera
CMIP7422W-M

Key Features:

- Up to 2 megapixel high resolution
- 120dB Wide Dynamic Range
- 3D DNR,BLC,Support H.264 Zip+
- 3-axis adjustment
- IP66,Vandal-proof
- DC 12V/ PoE

Dimensions:

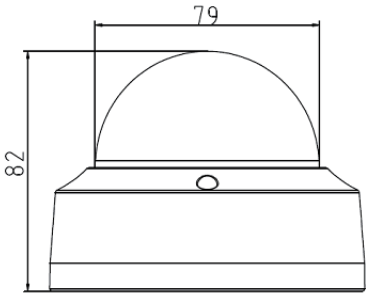

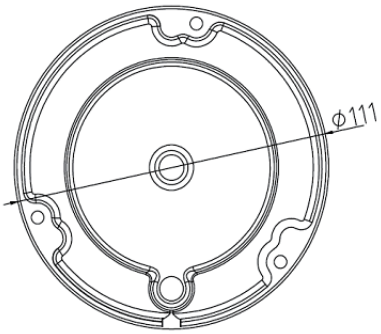

WDR 120dB

ICR

D&N

VANDAL PROOF

3D DNR

IP66

©2015 LT Security, Inc. | info@LTSecurityinc.com | www.LTSecurityinc.com

Platinum 2MP Network Mini Camera
CMIP7422W-M

CAMERA	
Image Sensor	1/2.8" Progressive Scan CMOS
Min. Illumination	0.01Lux @ (F1.2, AGC ON), 0 Lux with IR
Shutter Speed	1/3 s to 1/10,000 s
Lens	4mm
Lens Mount	M12
Day &Night	IR cut filter with auto switch
DNR	3D DNR
Wide Dynamic Range	120dB
P&T rotation	Pan: -90° ~ 90°, Tilt: 0° ~ 75°
Compression Standard	
Video Compression	H.264 / MJPEG/H.264 Zip+
H.264 Type	Main Profile
Video Bit Rate	32 Kbps ~ 8 Mbps
Dual streams	Support
Image	
Max. Resolution	1920 × 1080
Frame Rate	60Hz: 30fps (1920 × 1080), 30fps (1280 × 960), 30fps (1280 × 720) 50Hz: 25fps (1920 × 1080), 25fps (1280 × 960), 25fps (1280 × 720)
Image Setting	Rotate Mode, Saturation, Brightness, Contrast, Sharpness adjustable by client software or web browser
BLC	Support, zone configurable
ROI Codec	Support
Network	
Network Storage	NAS (Support NFS,SMB/CIFS), ANR
Alarm Trigger	Motion detection, Tampering alarm, Network disconnect, IP address conflict, Storage exception
Protocols	TCP/IP, UDP, ICMP, HTTP, HTTPS, FTP, DHCP, DNS, DDNS, RTP, RTSP, RTCP, PPPoE, NTP, UPnP, SMTP, SNMP, IGMP, 802.1X, QoS, IPv6, Bonjour
General	One-key reset, Flash-prevention, dual stream, heartbeat, mirror, password protection, privacy mask, watermark, IP address filtering, Anonymous access
Standard	ONVIF (PROFILE S, PROFILE G), PSIA, CGI, ISAPI
Interface	
Communication Interface	1 RJ45 10M/100M Ethernet port
On-board storage	Built-in Micro SD/SDHC/SDXC slot, up to 128GB
Reset	Yes
General	
Working Temperature /Humidity	-22 °F ~ 140 °F (-30 °C ~ 60 °C)
	Humidity 95% or less (non-condensing)
Power Supply	DC12V ± 10%, PoE (802.3af)
Power Consumption	Max. 5W
IR Range	Approx. 100ft (30 meters)
Weather Proof Ratings	IP66
Impact Protection	IK08
Dimensions	Φ4.4" × 3.2" (Φ111×82.0mm)
Weight	1.1 lbs (500g)

©2015 LT Security, Inc. All Rights Reserved. White papers, data sheets, quick start guides, and/or user manuals are for reference only and may or may not be entirely up to date or accurate based upon the version or models. Product names mentioned herein may be the unregistered and/or registered trademarks of their respective owners.